WESTMINSTER ADIRONDACK - 12221

PARTS LIST :

A. CHAIR LEG AND SEAT 1 PC

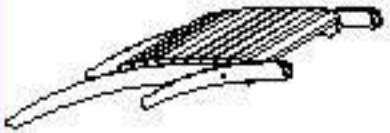

B. CHAIR BACKREST 1 PC

C. ARM 2 PCS

D. FOOTREST 1 PC

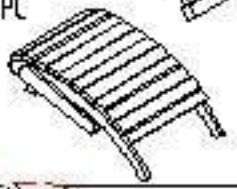

HARDWARE :

E. WOODEN DOWELS	4 PCS
F. HEXAGONAL SCREW A	2 PCS
G. HEXAGONAL SCREW B	2 PCS
H. SCREW	4 PCS

TOOLS REQUIRED :

I. PHILLIPS SCREWDRIVER | NOT INCLUDED |
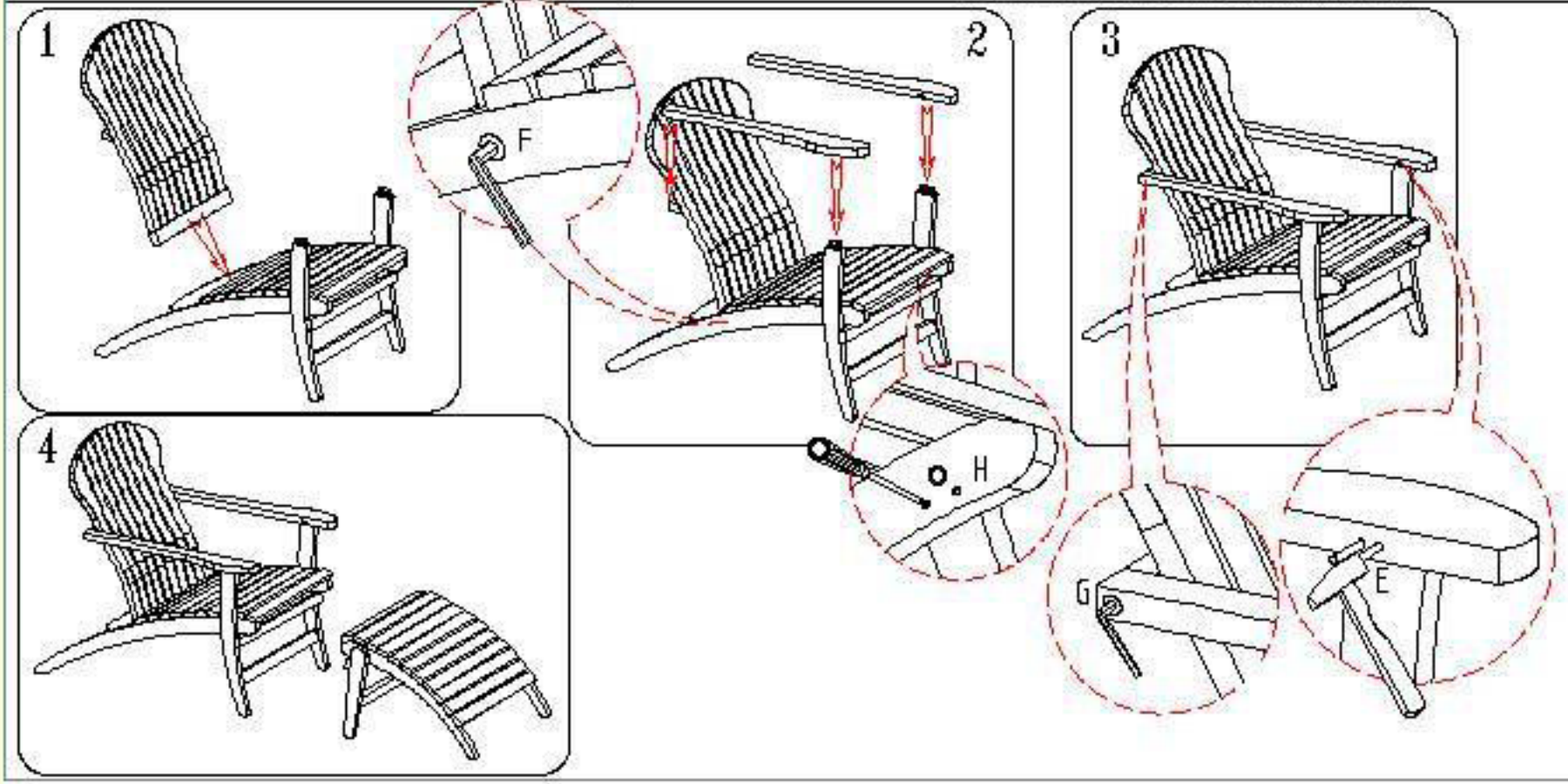
NOTE : Use a soft mallet hammer (not included) to prevent marking or denting wood when inserting wood dowels. Do not use excessive force to insert dowels. After inserting wood dowels, minimal sanding may be necessary to make dowel ends flush with surface.