# 18660 - CRAFTSMAN OTTOMAN

PART LIST :

A. MAIN FRAME 1 PC

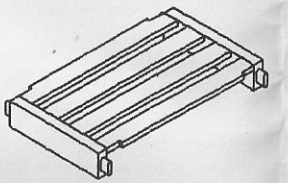

B. LEG 2 PCS

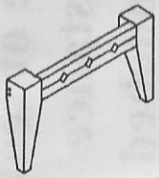

HARDWARE :

C . WOODEN DOWEL 8 PCS

NOTE : Use a soft mallet hammer ( not included ) to prevent marking or denting wood when inserting wood dowels. Do not use excessive force to insert dowels. After inserting wood dowels, minimal sanding may be necessary to make dowel ends flush with surface.

1

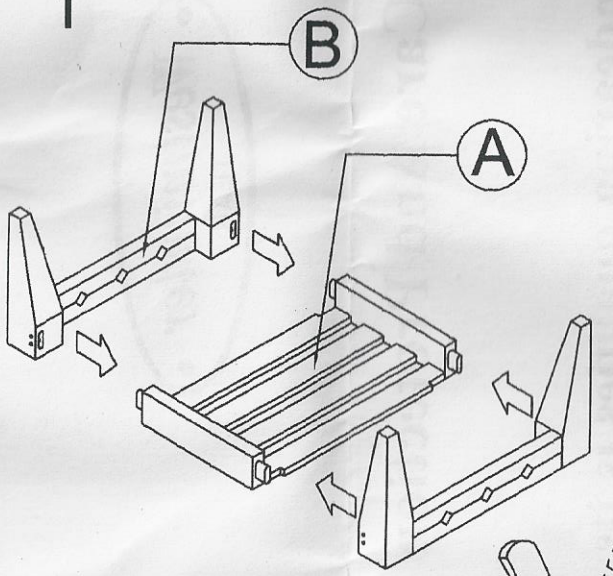


2

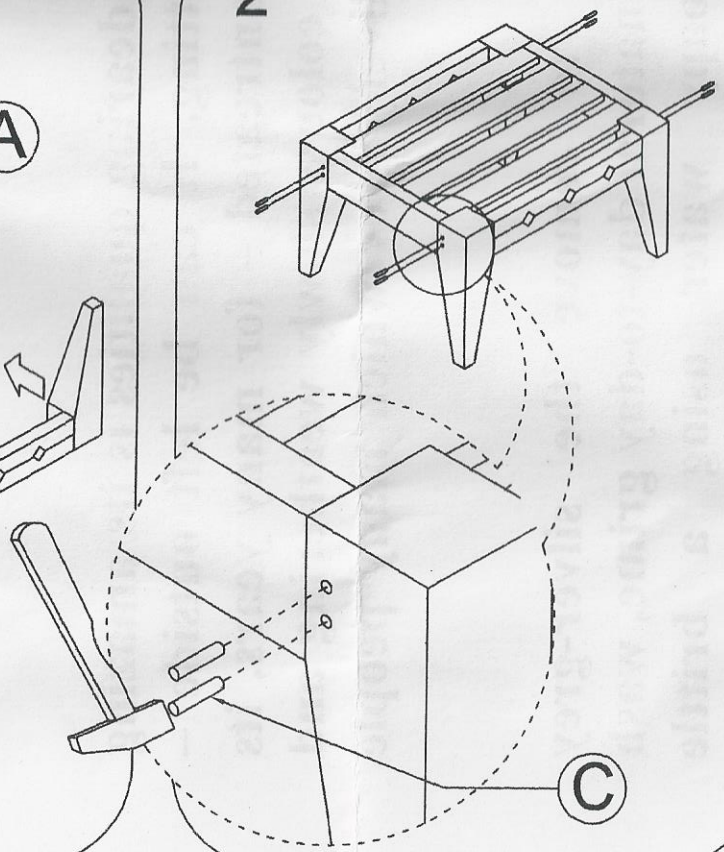


3

"IMPORTANT!!
Each joint is unique, precise and will fit flush. You must match the white numbered labels with the corresponding number on opposite piece. Put all pieces together **first** to assure that all the joints fit flush **then** tap in the wooden dowels"